E6 MU Utility Specifications

E6 MU FOOTPRINT

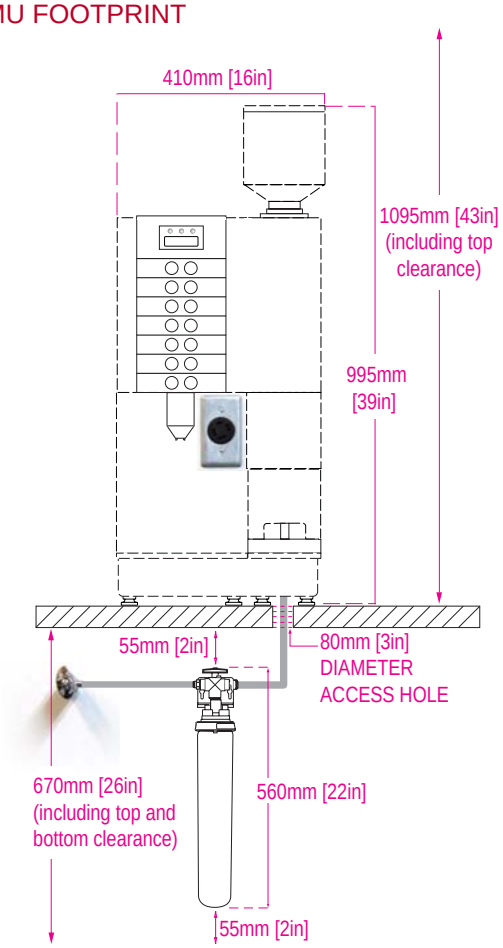

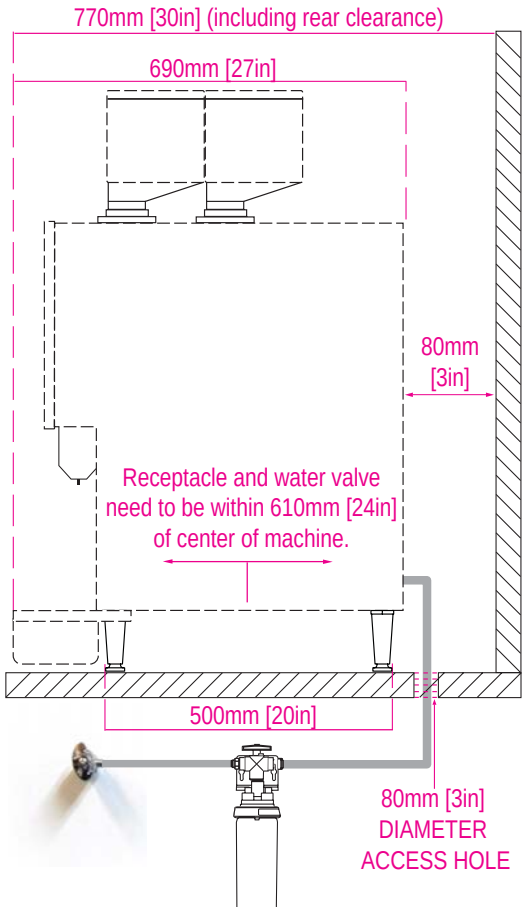

CUNO (Part # CFS6135-C) Water Softner System

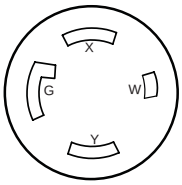	120/208 VAC, 30 Amp, Single phase. Neutral + ground power outlet. Receptacle type: NEMA L14-30 4 Prong Twist-lock. Breaker panel: 30 Amp dedicated circuit.
	Access hole with collar (no sharp edges). Located centrally under machine for water and drain hose. Diameter: 2-3 inches.
	Water shut-off valve with 3/8 inch compression fitting. Back flow preventer in accordance with local requirements.
	Optional drain pipe to floor drain. Copper or PVC in accordance with local health codes and regulations. Diameter: 1 inch.

The receptacle, water shut-off valve and drain pipe must be within 3 feet (36 inches) of the center of the location (footprint) of the machine.

Ideal under counter space for softener: 30 inches (minimum requirement: 26 inches).

Notes: *Access hole is only required if any of the utility hook-ups are located under the counter. Drain pipe is only necessary if the drain line from the drain tray is mounted fixed. A removable drain tray does not require a drain pipe since it will be emptied by the operator.*

Schaerer USA Corporation
2900 Orange Avenue, Suite 102 Signal Hill, CA 90755
www.schaererusa.com Phone (888) 989-3004 Fax (562) 989-3075